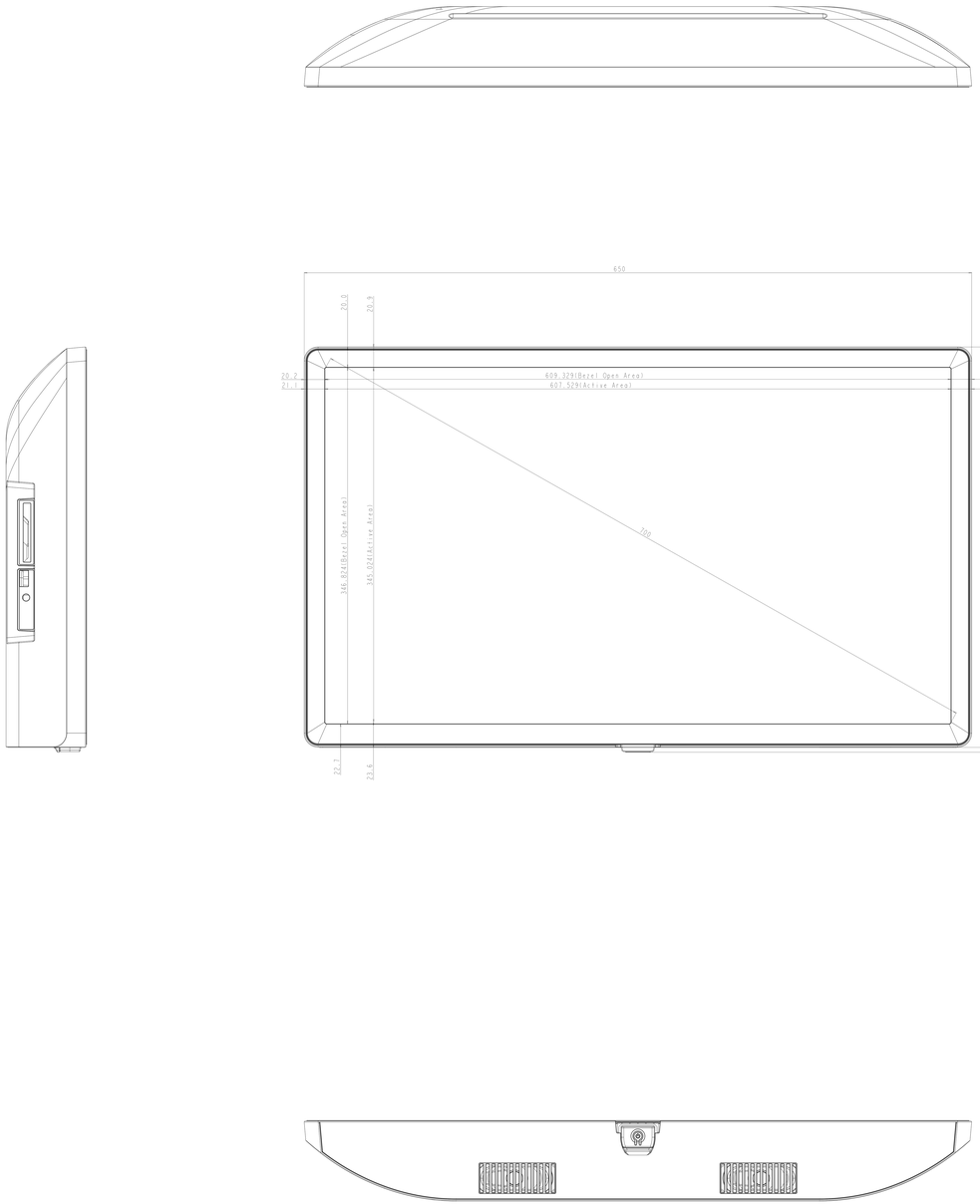
650
20.0
20.8
20.2
21.1
609.329(Bezel Open Area)
607.529(Active Area)
20.2
21.1
700
346.824(Bezel Open Area)
345.024(Active Area)
330
395
22.1
23.6

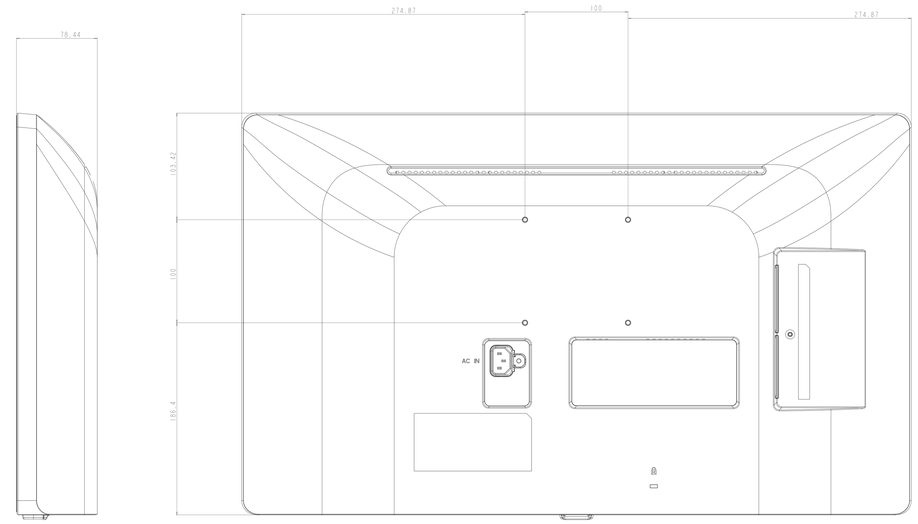
78.44
274.87
100
274.87
105.42
100
186.4
AC IN